1. Figure 1 shows the intrinsic transfer and output DC current-voltage characteristics of a top-gated graphene field-effect transistor (GFET). The channel width (W) is 10 µm, the gate length (L) is 200 nm, the top-gate oxide thickness (t_{ox}) is 4 nm, the relative permittivity of the top-gate oxide ($\varepsilon_{r,ox}$) is 6.4, the vacuum permittivity (ε_0) is 8.85×10^{-12} F/m, and the electron charge (e) is 1.6×10^{-19} C.

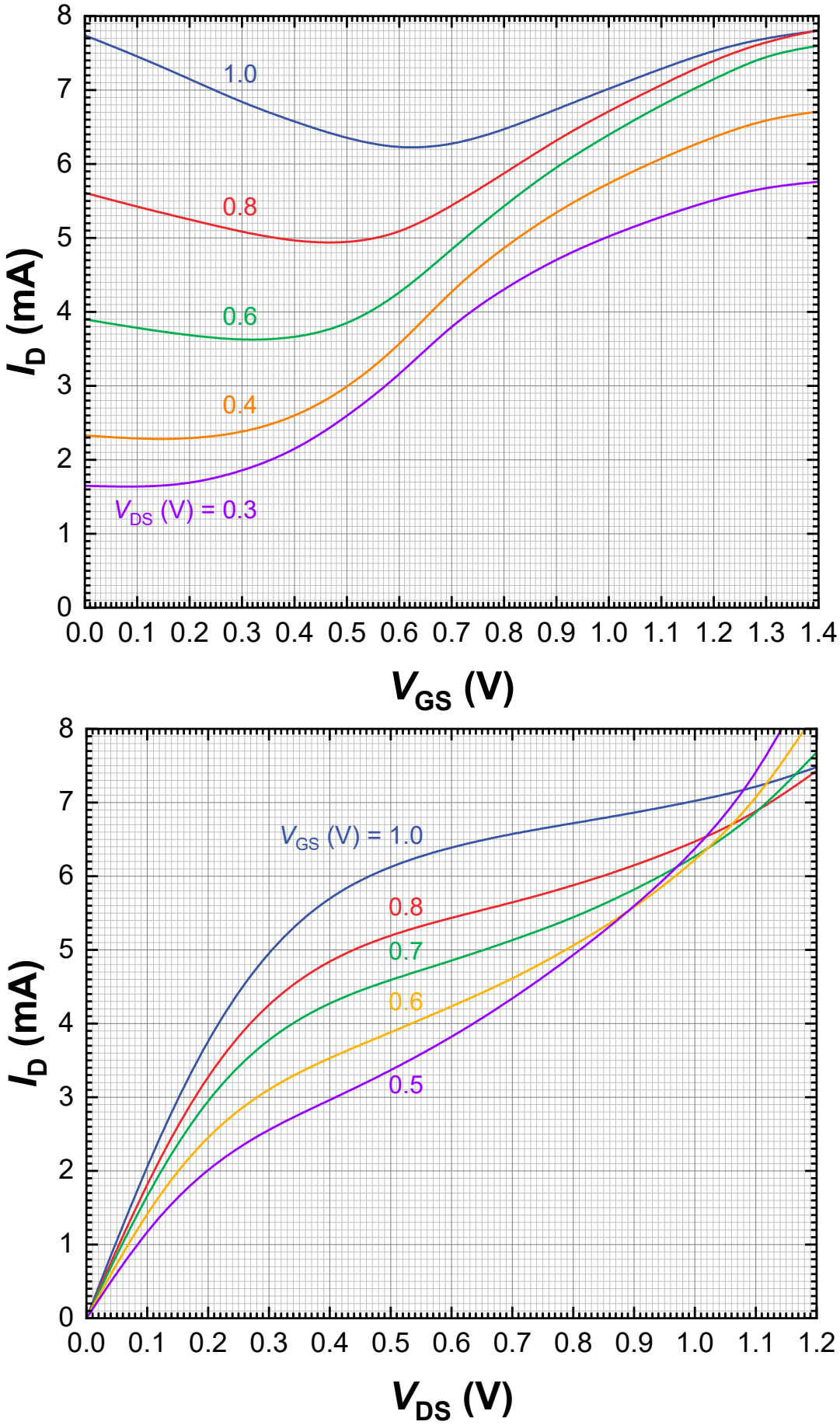

Figure 1 Intrinsic DC current-voltage characteristics of a GFET. (Top) Transfer characteristics. (Bottom) Output characteristics.

(a) The GFET is connected in the amplifier circuit shown in Figure 2. Mark the DC operating point Q_1 on the transfer and output characteristics in Figure 1. Calculate the transconductance (g_m), output conductance (g_d), and intrinsic gain ($A = g_m/g_d$) of the GFET at this operating point.

(b) Draw the small-signal equivalent circuit model of the GFET that is valid in the low-frequency AC regime.

(c) Derive the expression for the low-frequency voltage gain $A_v = v_{out}/v_{in}$ and calculate its numerical value for the amplifier in Figure 2, operating at the point Q_1 identified in part (a). Assume v_{in} and v_{out} represent the AC components of the input and output voltages, respectively. Use the small-signal equivalent model of the GFET from part (b).

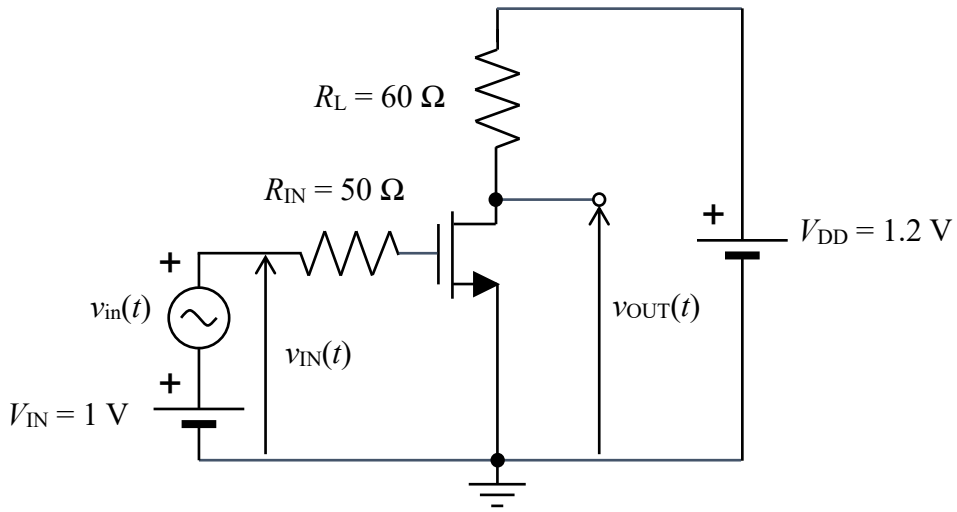

Figure 2 GFET in a common-source amplifier.

(d) Repeat part (a) for an extrinsic GFET with the same intrinsic characteristics as in Figure 1. Assume extrinsic resistances of $R_G = 20\ \Omega$, $R_S = 80\ \Omega$, and $R_D = 100\ \Omega$, and denote the DC operating point as Q_2.

(e) Define the admittance (y) and hybrid (h) parameters of a two-port network in the small-signal AC regime. Using these definitions, derive expressions for y_{11}, y_{21}, and h_{21} in terms of the phasor voltages (V_1 and V_2) and currents (I_1 and I_2) in the network. Then, derive an expression for the intrinsic current gain (h_{21}) as a function of the y-parameters.

(f) Derive expression for y_{11}, y_{12}, y_{21}, and y_{22} for a high-frequency intrinsic GFET.

(g) Derive an expression for h_{21} in the case of a high-frequency intrinsic GFET, as a function of its small-signal parameters. Then, derive the expression for the intrinsic cut-off frequency ($f_{T,int}$) and calculate its numerical value at the DC operating point Q_1 identified in part (a).

(h) Derive an expression for the transconductance g_m of a GFET using a linear approximation of its DC current-voltage characteristics $I_D(V_{GS}, V_{DS})$.

(i) Using the expression for g_m derived in part (h), calculate the numerical values of the field-effect carrier mobility (μ) and carrier velocity (v) at the DC operating point Q_1 from part (a). Assume that the carrier velocity is less than the saturation velocity (v_s).

(j) Repeat part (i) at the DC operating point Q_2 from part (d).

(k) Derive an expression for the maximum frequency of oscillation (f_{max}) and calculate its numerical value at the DC operating point Q_1 from part (a), in the semi-intrinsic case. Assume that the parameters y_{12}, y_{21}, and y_{22} are as given in part (f), and that y_{11} corresponds to a semi-intrinsic GFET with gate resistance $R_G = 20\ \Omega$, and $R_S = R_D = 0\ \Omega$. The unilateral power gain is given by

$$G' = \frac{|y_{21} - y_{12}|^2}{4\left(\mathrm{Re}(y_{11})\,\mathrm{Re}(y_{22}) - \mathrm{Re}(y_{12})\,\mathrm{Re}(y_{21})\right)}.$$

2. The Hamiltonian in graphene is

$$\mathbf{H}(\mathbf{k}) = \begin{bmatrix} 0 & -\gamma f(\mathbf{k}) \\ -\gamma f^*(\mathbf{k}) & 0 \end{bmatrix}$$

(a) Derive an expression for the eigenenergy $E(\mathbf{k})$ as a function of $f(\mathbf{k})$.
(b) Derive an expression for the eigenfunction $\mathbf{\Psi}(\mathbf{k})$ as a function of $f(\mathbf{k})$.
(c) Simplify the expressions obtained in parts (a) and (b) near the Dirac point $\mathbf{K}$, where $f(\mathbf{k}) = 3a(-q_x + jq_y)/2$, $\mathbf{k} = \mathbf{K} + \mathbf{q}$.
(d) Derive an expression for the scattering matrix element $\langle \mathbf{k}_f, \mathbf{r} | H_{\text{scatt}}(\mathbf{r}) | \mathbf{k}_i, \mathbf{r} \rangle$ in graphene near the Dirac point $\mathbf{K}$. What is the important consequence of this result?
(e) Derive an expression for the density of states (DOS) in graphene near the Dirac point $\mathbf{K}$. What is the value of the DOS at $E = 0$, and what is the physical significance of this result?

1. Plots:

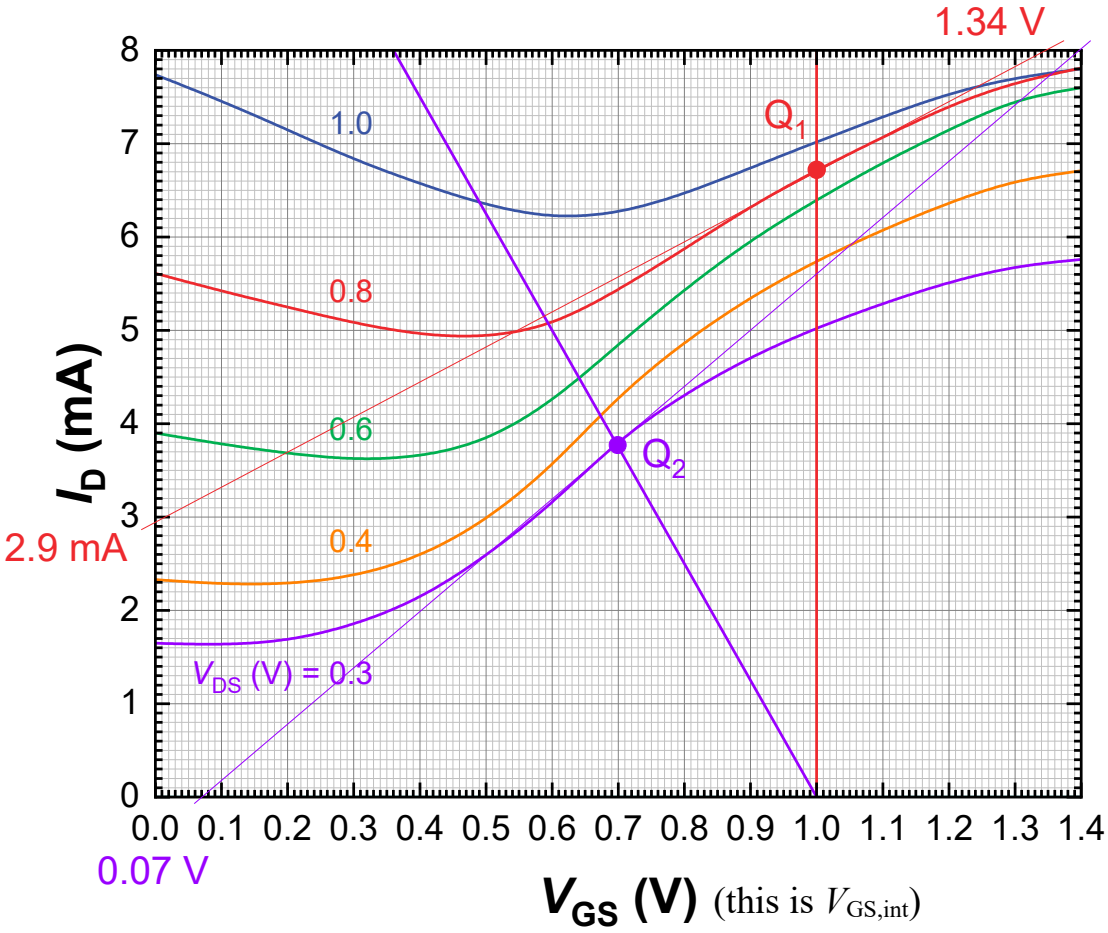
1.34 V
1.0
0.8
0.6
0.4
V_{DS} (V) = 0.3
Q_1
Q_2
2.9 mA
0.07 V
I_D (mA)
V_{GS} (V) (this is $V_{GS,int}$)

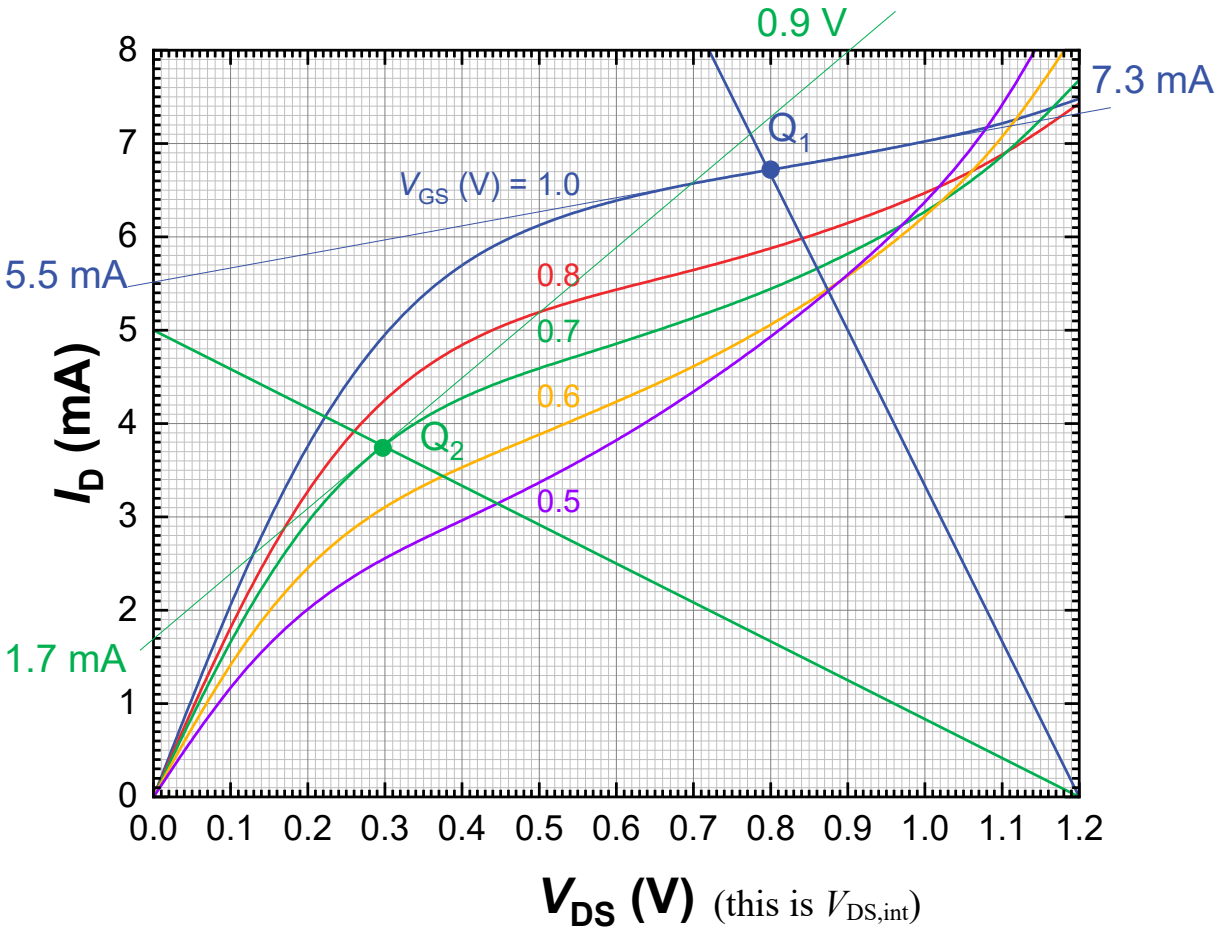
0.9 V
7.3 mA
Q_1
V_{GS} (V) = 1.0
5.5 mA
0.8
0.7
0.6
0.5
Q_2
1.7 mA
I_D (mA)
V_{DS} (V) (this is $V_{DS,int}$)

(a) $V_{GS} = V_{GS,int}$ and $V_{DS} = V_{DS,int}$ (intrinsic GFET)

$$V_{IN} = V_{GS} + R_{IN} I_G = V_{GS} \Rightarrow V_{GS} = V_{IN} = 1\text{ V}$$

$$V_{DD} = V_{DS} + R_L I_D \Rightarrow I_D = \frac{V_{DD} - V_{DS}}{R_L}$$

Transfer: Q_1 (1 V, 6.7 mA)

Output: Q_1 (0.8 V, 6.7 mA)

$$g_m = \frac{(8-2.9)\text{ mA}}{1.34\text{ V}} = 3.8\text{ mS} \quad g_d = \frac{(7.3-5.5)\text{ mA}}{1.2\text{ V}} = 1.5\text{ mS} \Rightarrow r_d = \frac{1}{g_d} = 667\ \Omega$$

$$A = \frac{g_m}{g_d} = 2.53 > 1$$

(b) Slide 93.

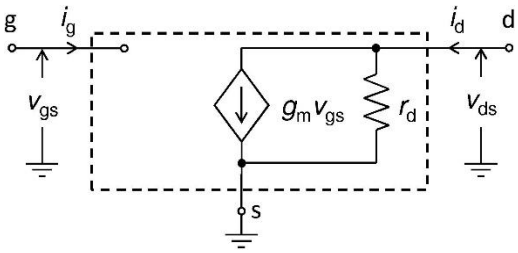

(c) Slide 94.

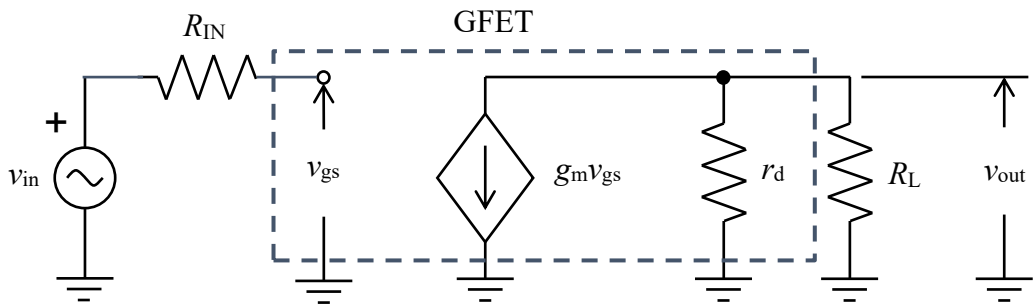

$$A_v = \frac{v_{out}}{v_{in}} = -g_m (r_d \parallel R_L) = -\frac{R_L}{R_L + r_d} A = -\frac{60}{667+60} 2.54 = -0.21$$

(d) Slides 149-151.

$$V_{IN} = R_S I_D + V_{GS,int} + R_G I_G + R_{IN} I_G = R_S I_D + V_{GS,int} \Rightarrow I_D = \frac{V_{IN} - V_{GS,int}}{R_S} \quad (1)$$

$$V_{DD} = R_S I_D + V_{DS,int} + R_D I_D + R_L I_D \Rightarrow I_D = \frac{V_{DD} - V_{DS,int}}{R_S + R_D + R_L} \quad (2)$$

The intersections of the load line (2) and the output curves occur in the range 0.2 V < $V_{DS,int}$ < 0.5 V. Therefore, only the transfer curves corresponding to $V_{DS,int}$ = 0.3 and 0.4 V need to be considered. The correct operating point corresponds to $V_{DS,int}$ = 0.3 V, because the intersection of line (1) with the transfer curve for $V_{DS,int}$ = 0.4 V gives I_D > 4 mA and $V_{GS,int}$ < 0.7 V, which is impossible to obtain from load line (2), as it would require $V_{GS,int}$ > 0.8 V.

Transfer: Q_2 (0.7 V, 3.8 mA)

Output: Q_2 (0.3 V, 3.8 mA)

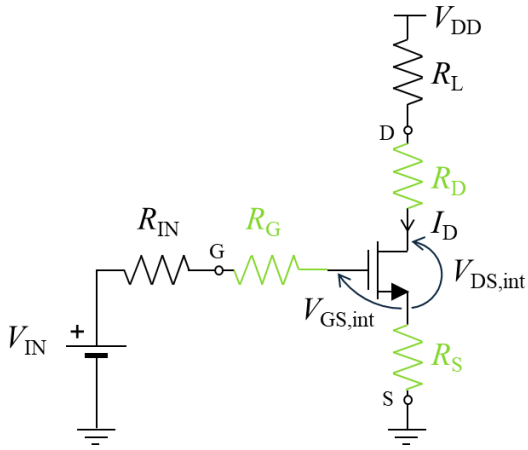

$$g_m = \frac{8\text{ mA}}{(1.4-0.07)\text{ V}} = 6.0\text{ mS} \quad g_d = \frac{(8-1.7)\text{ mA}}{0.9\text{ V}} = 7.0\text{ mS}$$

$$A = \frac{g_m}{g_d} = 0.86$$

(e) Slides 102, 103.

$$I_1 = y_{11}\,V_1 + y_{12}\,V_2$$
$$I_2 = y_{21}\,V_1 + y_{22}\,V_2$$

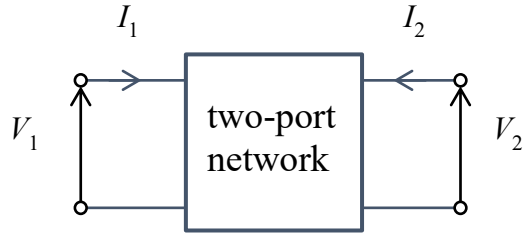

$$V_1 = h_{11}\,I_1 + h_{12}\,V_2$$
$$I_2 = h_{21}\,I_1 + h_{22}\,V_2$$

$$y_{11} = \left.\frac{I_1}{V_1}\right|_{V_2=0} \qquad y_{21} = \left.\frac{I_2}{V_1}\right|_{V_2=0} \qquad h_{21} = \left.\frac{I_2}{I_1}\right|_{V_2=0}$$

(f) Slide 104.

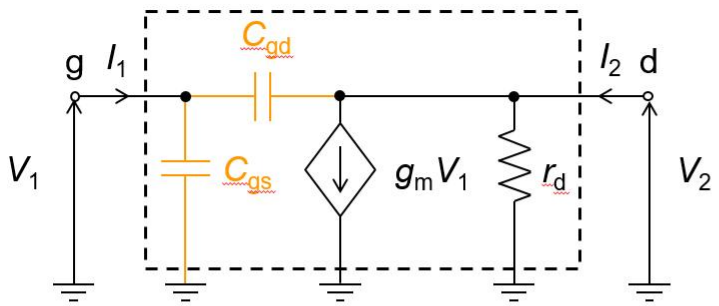

$$y_{11} = \left.\frac{I_1}{V_1}\right|_{V_2=0} \quad y_{21} = \left.\frac{I_2}{V_1}\right|_{V_2=0}$$

$$y_{12} = \left.\frac{I_1}{V_2}\right|_{V_1=0} \quad y_{22} = \left.\frac{I_2}{V_2}\right|_{V_1=0}$$

$V_2 = 0$

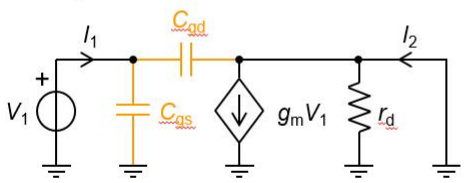

$V_1 = 0$

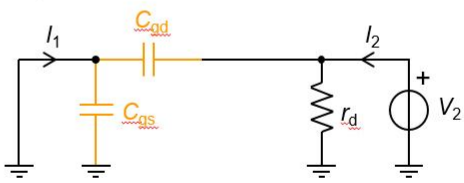

$$I_1 = j\omega(C_{gs} + C_{gd})V_1 \Rightarrow y_{11} = j\omega(C_{gs} + C_{gd})$$
$$I_2 + j\omega C_{gd}V_1 = g_m V_1 \Rightarrow y_{21} = g_m - j\omega C_{gd}$$

$$I_1 = -j\omega C_{gd}V_2 \Rightarrow y_{12} = -j\omega C_{gd}$$
$$I_2 - j\omega C_{gd}V_2 = g_d V_2 \Rightarrow y_{22} = g_d + j\omega C_{gd}$$

(g) Slides 103, 107.

$$h_{21} = \left.\frac{I_2}{I_1}\right|_{V_2=0} = \frac{y_{21}V_1}{y_{11}V_1} = \frac{y_{21}}{y_{11}} = \frac{g_m - j\omega C_{gd}}{j\omega(C_{gs} + C_{gd})} \approx \frac{g_m}{j\omega C_G}$$

$$|h_{21}(f)| \approx \frac{|g_m|}{\omega C_G}$$

$$|h_{21}(f_{T,int})| = 1 = \frac{|g_m|}{2\pi f_{T,int} C_G} \Rightarrow f_{T,int} = \frac{1}{2\pi}\frac{g_m}{C_G} = \frac{1}{2\pi}\frac{3.8\text{ mS}}{28.3\text{ fF}} = 21.4\text{ GHz}$$

$$C_G = \varepsilon_{ox}\frac{WL}{t_{ox}} = 6.4\times 8.85\times 10^{-12}\,\frac{10^{-5}\times 2\times 10^{-7}}{4\times 10^{-9}}\text{ F} = 28.3\text{ fF}$$

(h) Slide 96. In the linear approximation:

$$Q_{\mathrm{ch}} = Q_{\mathrm{p}} - Q_{\mathrm{G}} = C_{\mathrm{G}} V_{\mathrm{th}} - C_{\mathrm{G}} V_{\mathrm{GS}} = C_{\mathrm{G}} (V_{\mathrm{th}} - V_{\mathrm{GS}})$$

$$n_{\mathrm{ch}} = \frac{|Q_{\mathrm{ch}}|}{eA} = \frac{C_{\mathrm{ox}} WL |V_{\mathrm{GS}} - V_{\mathrm{th}}|}{eWL} = \frac{\varepsilon_{\mathrm{ox}}}{t_{\mathrm{ox}}} \frac{|V_{\mathrm{GS}} - V_{\mathrm{th}}|}{e} \Rightarrow \sigma_{\mathrm{ch}} = n_{\mathrm{ch}} e\mu = \frac{\varepsilon_{\mathrm{ox}} \mu}{t_{\mathrm{ox}}} |V_{\mathrm{GS}} - V_{\mathrm{th}}|$$

$$G = \frac{W}{L}(\sigma_{\mathrm{th}} + \sigma_{\mathrm{ch}}) = G_{\mathrm{th}} + \frac{W}{L} \frac{\varepsilon_{\mathrm{ox}} \mu}{t_{\mathrm{ox}}} |V_{\mathrm{GS}} - V_{\mathrm{th}}| \Rightarrow I_{\mathrm{D}} = G V_{\mathrm{DS}} = \left(G_{\mathrm{th}} + \frac{W}{L} \frac{\varepsilon_{\mathrm{ox}} \mu}{t_{\mathrm{ox}}} |V_{\mathrm{GS}} - V_{\mathrm{th}}| \right) V_{\mathrm{DS}}$$

$$g_{\mathrm{m}} = \left. \frac{dI_{\mathrm{D}}}{dV_{\mathrm{GS}}} \right|_{V_{\mathrm{DS}} = \mathrm{const}} = \pm \frac{W}{L} \frac{\varepsilon_{\mathrm{ox}} \mu}{t_{\mathrm{ox}}} V_{\mathrm{DS}}$$

(i) Slide 96. The operating point is in the $g_{\mathrm{m}} > 0$ part of the transfer curve (here $V_{\mathrm{DS}} = V_{\mathrm{DS,int}}$):

$$g_{\mathrm{m}} = \frac{W}{L} \frac{\varepsilon_{\mathrm{ox}} \mu}{t_{\mathrm{ox}}} V_{\mathrm{DS}} = \frac{C_{\mathrm{G}}}{L^2} \mu V_{\mathrm{DS}} \Rightarrow \mu = \frac{L^2}{C_{\mathrm{G}}} \frac{g_{\mathrm{m}}}{V_{\mathrm{DS}}} = \frac{(2 \times 10^{-7})^2}{28.3 \times 10^{-15}} \frac{3.8 \times 10^{-3}}{0.8} \ \mathrm{m^2/(Vs)} = 67.1 \ \mathrm{cm^2/(Vs)}$$

$$v = \mu E = \mu \frac{V_{\mathrm{DS}}}{L} = 67.1 \ \mathrm{cm^2/(Vs)} \frac{0.8 \ \mathrm{V}}{200 \ \mathrm{nm}} = 2.7 \times 10^6 \ \mathrm{cm/s}$$

(j) Slide 96. The operating point is in the $g_{\mathrm{m}} > 0$ part of the transfer curve:

$$g_{\mathrm{m}} = \frac{W}{L} \frac{\varepsilon_{\mathrm{ox}} \mu}{t_{\mathrm{ox}}} V_{\mathrm{DS,int}} = \frac{C_{\mathrm{G}}}{L^2} \mu V_{\mathrm{DS,int}} \Rightarrow \mu = \frac{L^2}{C_{\mathrm{G}}} \frac{g_{\mathrm{m}}}{V_{\mathrm{DS,int}}} = \frac{(2 \times 10^{-7})^2}{28.3 \times 10^{-15}} \frac{6.0 \times 10^{-3}}{0.3} \ \mathrm{m^2/(Vs)} = 282 \ \mathrm{cm^2/(Vs)}$$

$$v = \mu E = \mu \frac{V_{\mathrm{DS,int}}}{L} = 282 \ \mathrm{cm^2/(Vs)} \frac{0.3 \ \mathrm{V}}{200 \ \mathrm{nm}} = 4.2 \times 10^6 \ \mathrm{cm/s}$$

Note that field-effect mobility is not a very reliable indicator of the actual carrier mobility. The mobility obtained at the operating point Q_2 is more reliable, as Q_2 lies closer to the ohmic regime.

(k) Slides 129, 130.

$$G'(\omega) = \frac{|y_{21} - y_{12}|^2}{4(\mathrm{Re}(y_{11})\mathrm{Re}(y_{22}) - \mathrm{Re}(y_{12})\mathrm{Re}(y_{21}))} = \frac{|g_{\mathrm{m}} - j\omega C_{\mathrm{gd}} - (-j\omega C_{\mathrm{gd}})|^2}{4(\omega^2 R_{\mathrm{G}} (C_{\mathrm{gs}} + C_{\mathrm{gd}})^2 g_{\mathrm{d}} - 0 \times g_{\mathrm{m}})} = \frac{g_{\mathrm{m}}^2}{4\omega^2 R_{\mathrm{G}} (C_{\mathrm{gs}} + C_{\mathrm{gd}})^2 g_{\mathrm{d}}}$$

$$G'(\omega_{\max}) = 1 \Rightarrow \frac{g_{\mathrm{m}}^2}{4\omega_{\max}^2 R_{\mathrm{G}} (C_{\mathrm{gs}} + C_{\mathrm{gd}})^2 g_{\mathrm{d}}} = 1 \Rightarrow \omega_{\max} = \frac{|g_{\mathrm{m}}|}{2(C_{\mathrm{gs}} + C_{\mathrm{gd}})\sqrt{R_{\mathrm{G}} g_{\mathrm{d}}}}$$

$$f_{\max} = \frac{\omega_{\max}}{2\pi} = \frac{1}{2\pi} \frac{|g_{\mathrm{m}}|}{(C_{\mathrm{gs}} + C_{\mathrm{gd}})} \frac{1}{2\sqrt{R_{\mathrm{G}} g_{\mathrm{d}}}} = \frac{f_{\mathrm{T,int}}}{2\sqrt{R_{\mathrm{G}} g_{\mathrm{d}}}} = \frac{21.4 \ \mathrm{GHz}}{2\sqrt{20 \ \Omega \times 1.5 \ \mathrm{mS}}} = 61.8 \ \mathrm{GHz}$$